HEADLIGHT (w/ DAYTIME RUNNING LIGHT)

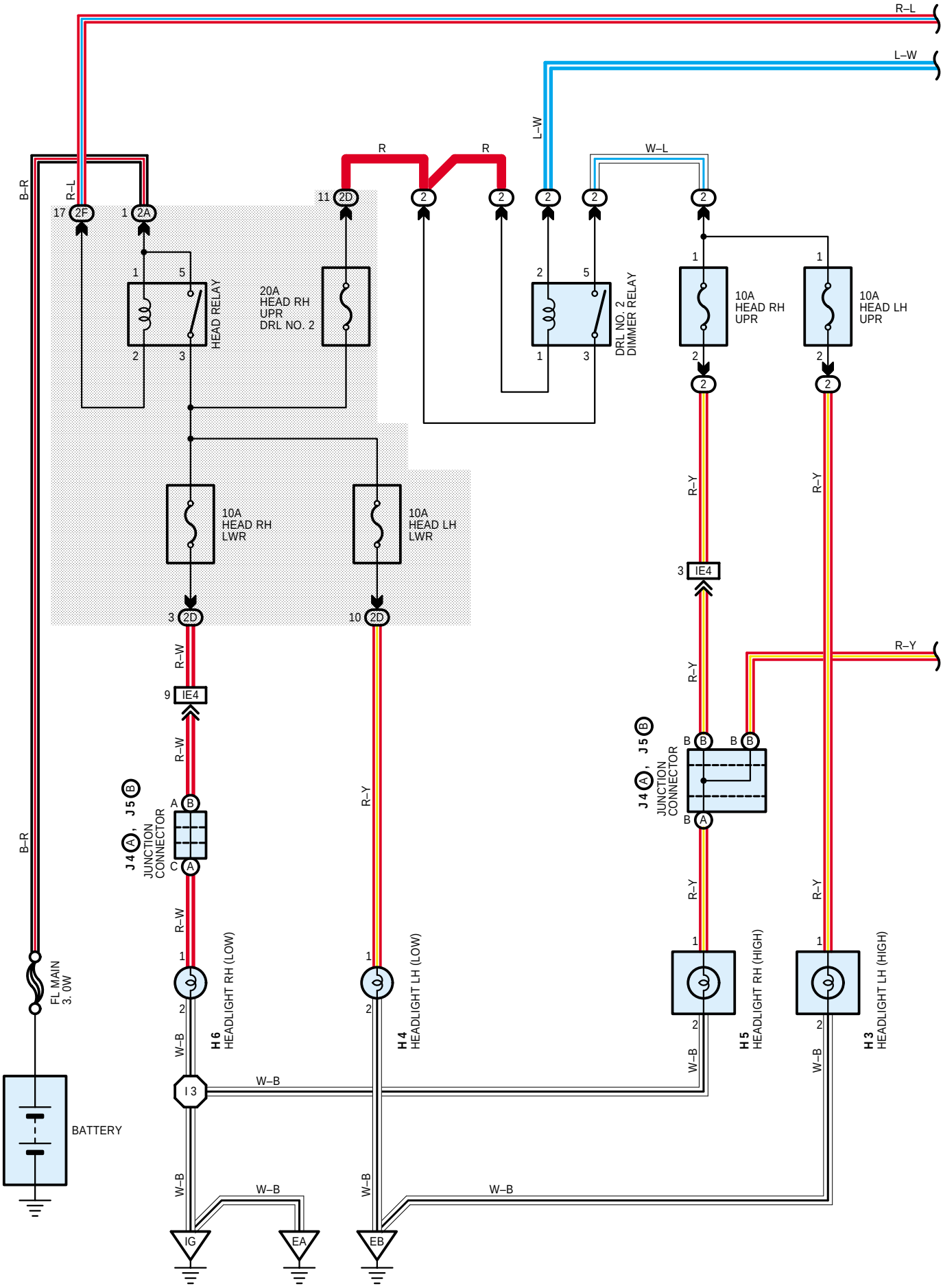

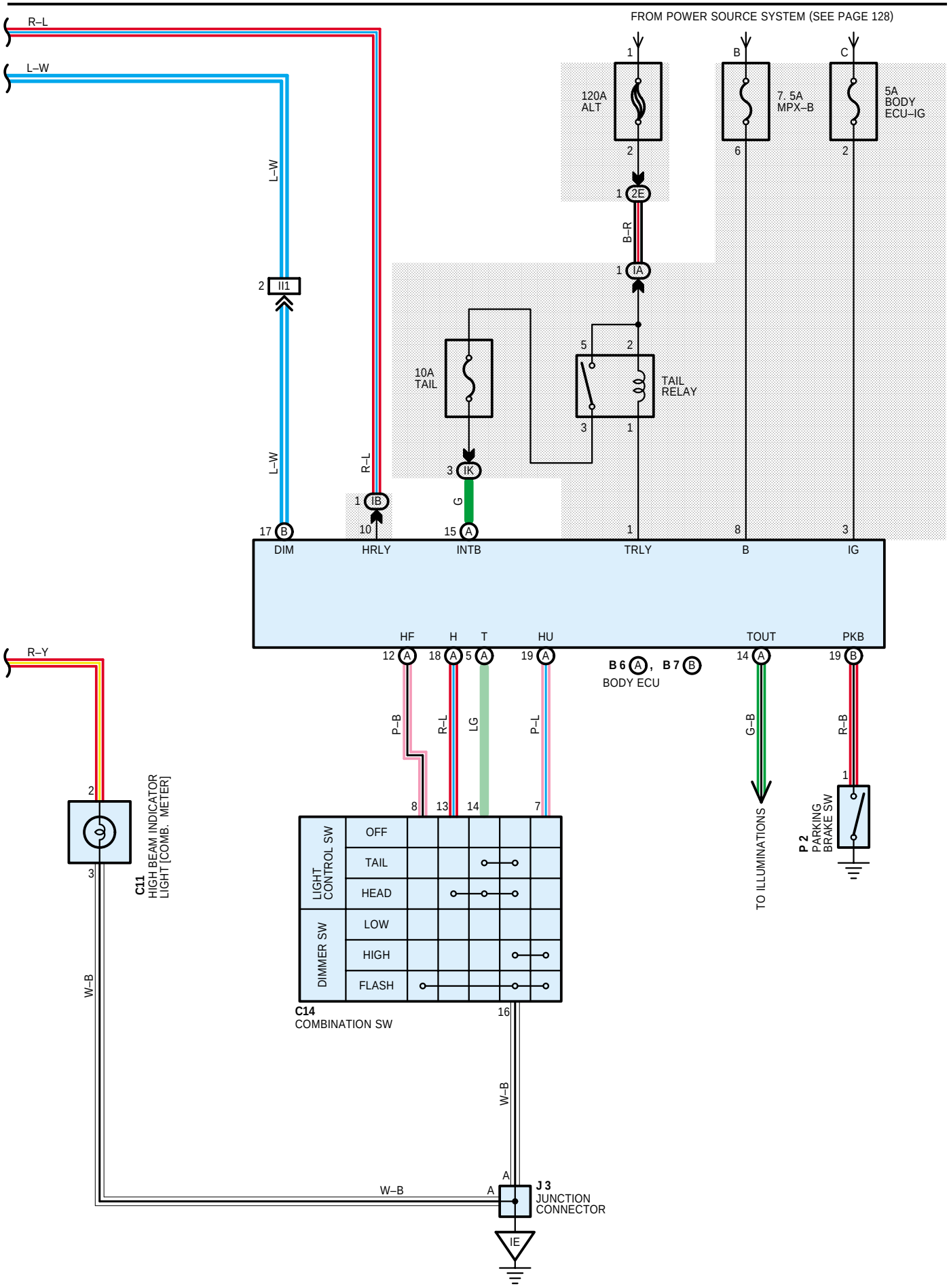
FROM POWER SOURCE SYSTEM (SEE PAGE 128)
R–L
L–W
120A ALT
7. 5A MPX–B
5A BODY ECU–IG
B–R
II1
10A TAIL
TAIL RELAY
IK
IB
IA
2E
G
DIM
HRLY
INTB
TRLY
B
IG
HF
H
T
HU
TOUT
PKB
B 6 A, B 7 B
BODY ECU
P–B
LG
P–L
G–B
TO ILLUMINATIONS
P 2 PARKING BRAKE SW
R–Y
C11 HIGH BEAM INDICATOR LIGHT [COMB. METER]
W–B
LIGHT CONTROL SW
OFF
TAIL
HEAD
DIMMER SW
LOW
HIGH
FLASH
C14 COMBINATION SW
J 3 JUNCTION CONNECTOR
IE